61 cm DESIGNER UNDERCOUNTER WINE STORAGE - PANEL READY

ICBDEU2450W

FEATURES

Fully customizable exterior, accepting custom panels for an integrated look within cabinetry or stainless steel accessory panels and handles to coordinate other Sub-Zero and Wolf appliances

Seamlessly integrating anywhere, undercounter wine storage adds comfort to your master suite, creates a corner for libations in the study—the options are endless

Offers 42-bottle capacity

Intuitive, touch control panel offers ergonomic, convenient access to settings

Store reds and whites in separate temperature zones that keep wines at proper serving temperatures, within one degree of setpoint

Full-extension wine racks provide easy access to standard-size bottles, half bottles, and magnums without agitating others

Dual evaporators maintain constant, moderate humidity so corks do not dry out

UV-resistant glass door shields wine from harmful light

Soft-on LED lighting fully illuminates the interior when the door is open and can be adjusted to four unique stand-by accent lighting settings

Inventory tile system aids collection organization

ACCESSORIES

Custom Panel Lock Kit

Dual Install Kit - Handle-to-Drawer

Dual Install Kit - Handle-to-Handle

Pro Handle

Stainless Steel Dual Kickplate

Tubular Handle

Stainless Steel Glass Door Panels

Undercounter Solid Overlay Door

Accessories are available through an authorized dealer.
For local dealer information, visit subzerowolf.com.hk.

HANDLE ACCESSORIES

PRO

TUBULAR

Specifications are subject to change without notice. This information was generated on June 15, 2021. Verify specifications prior to finalizing your cabinetry/enclosures.

61 cm DESIGNER UNDERCOUNTER WINE STORAGE - PANEL READY

PRODUCT SPECIFICATIONS

Model	ICBDEU2450W
Dimensions	610 mm W x 876 mm H x 587 mm D
Door Clearance	673 mm
Weight	80 kg
Electrical Supply	220-240 VAC, 50/60 Hz
Electrical Service	0.6 A
Wine Storage Capacity	42 Bottles

ELECTRICAL

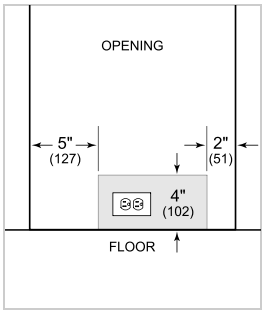

NOTE: The electrical outlet must be positioned with the grounding prong to the right of the thinner blades.

NOTE: Dimensions in parenthesis are in millimeters unless otherwise specified

INTERIOR VIEW

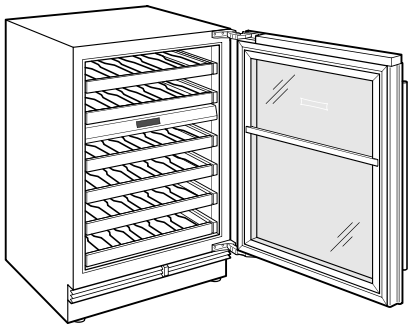

This illustration is intended for interior reference only and may not represent the exterior of the model being specified.

DIMENSIONS

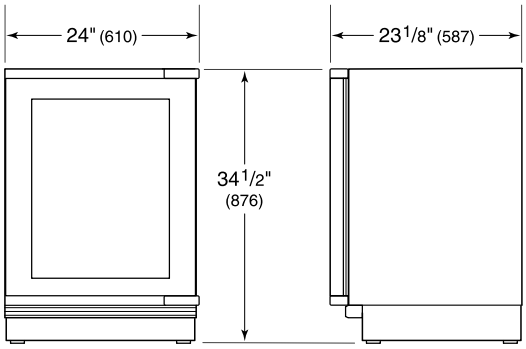

HEIGHT DIMENSIONS ± 1/2" (13)

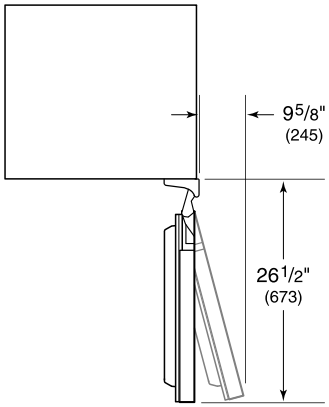

STANDARD INSTALLATION

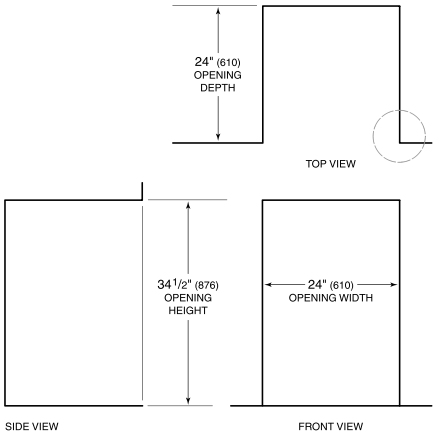
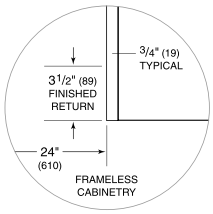
NOTE: 3 1/2" (89) finished returns will be visible and should be finished to match cabinetry.